ITEMS SHOWN ON THIS DOCUMENT CONTAIN PROPRIETARY INFORMATION OF PARLEC INC. AND IS SUBJECT TO BEING RETURNED UPON REQUEST. IT SHALL NOT BE REPRODUCED IN WHOLE OR PART WITHOUT WRITTEN PERMISSION OF PARLEC INC. ANY AUTHORIZED REPRODUCTION MUST BEAR THIS ENTIRE LEGEND.

REVISION RECORD			
LET	DESCRIPTION	BY	DATE
A	RELEASED	TT	2/05
B	ECR #8046	BAM	5/05
C	ECR #8141	BAM	7/05
D	ECR #8162	MW	8/05
E	ECR #8279	ON	6/06

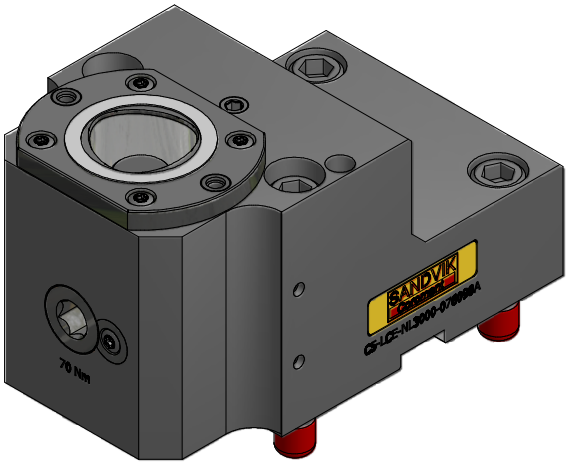

WEIGHT; 7.4kg

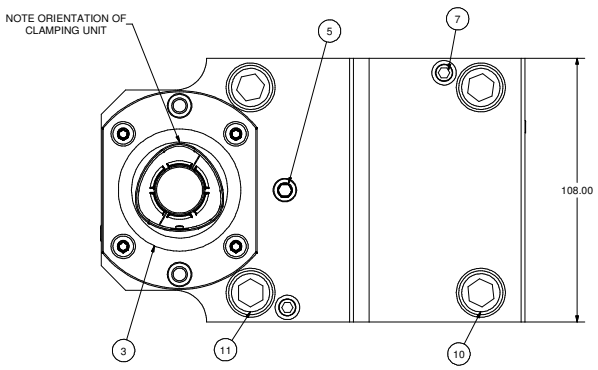

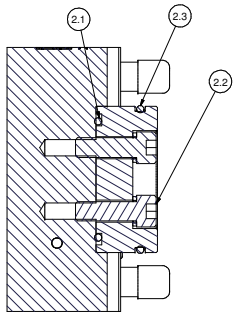

SECTION B-B

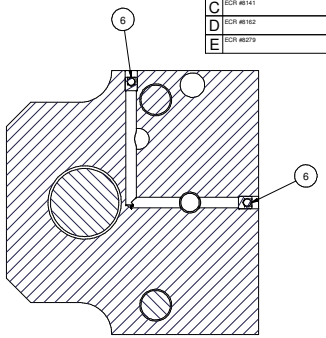

SECTION A-A

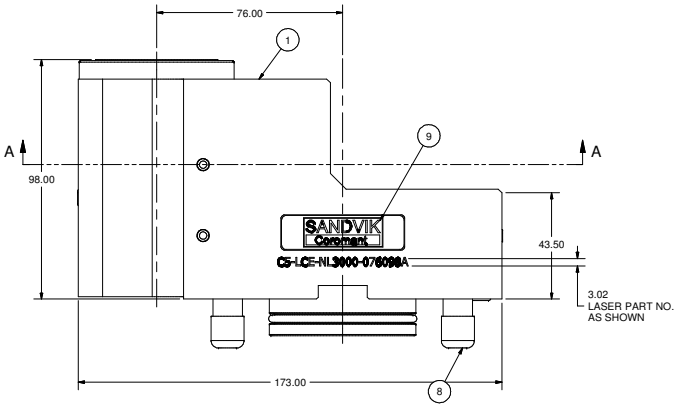

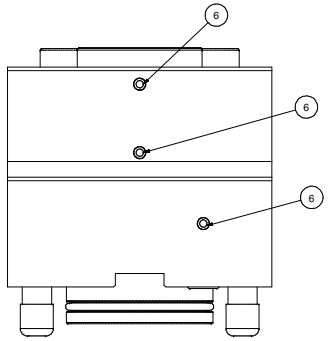

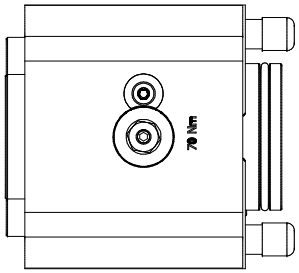

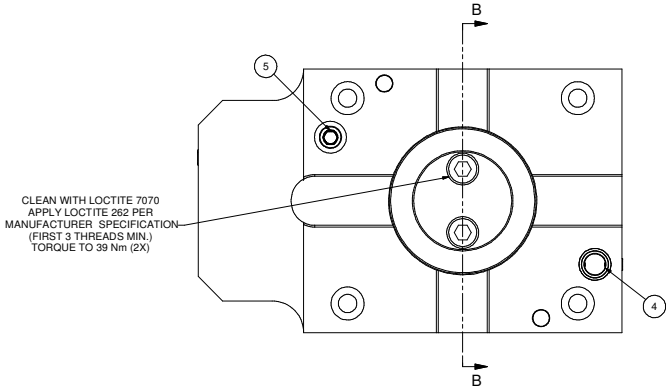

Parts List			
ITEM	QTY	PART NUMBER	DESCRIPTION
1	1	C5-076098A-1	BODY, OD CUTTING HOLDER - CAPTO C5
2.1	1	202-788-4470	O-RING 44.5 x 3
2.2	2	SHCSM8X25	CAP SCREW, M8 x 25
2.3	1	202-731-4470	O-RING 54.5 x 3
2.4	2	014-112	M8 LOCK WASHER
3	1	C5-CU-CS-11	CAPTO C5 CLAMPING UNIT, STATIC
4	1	204-009-4470	O-RING, 9 x 2
5	2	SSPLG0125BSPT	1/8" BSPT PIPE PLUG
6	5	MB 600-050	KOENIG EXPANDER SEALING PLUG
7	2	SSM8X30	SET SCREW, FLAT POINT, M8 x 30
8	4	FCWA-0111-019	M12 THREAD CAP
9	1	LB-SANDVIK	SANDVIK LABEL
10	2	SHCSM12X50	CAP SCREW, M12 x 50
11	2	SHCSM12X90	CAP SCREW, M12 x 90

THIRD ANGLE PROJECTION
BREAK ALL UNNECESSARY SHARP CORNERS
ANGULAR ± 1° (DEGREE)
INCH DIMENSIONS: .X ± .04, .XX ± .015, .XXX ± .005, .XXXX ± .0002
METRIC DIMENSIONS: X ± 1, .X ± 0.5, .XX ± 0.13, .XXX ± 0.005

PARLEC
(800) TOOL USA
WORLD HEADQUARTERS
101 PERINTON PARKWAY
FAIRPORT, NEW YORK 14450

PART NAME	CAPTO C5 O.D. TURNING, LH		
MATERIAL	SEE BOM	SCALE	NONE
H. T.	N/A	DATE	11/2/2004
FINISH	N/A		
DRAWN BY	T. TANDO	CHECKED BY	

PART NUMBER C5-LCE-NL3000-076098A

REV. E